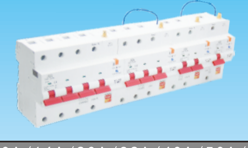

10A/16A/20A/32A/40A/50A/63A

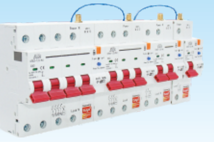

80A/100A/125A

User Manual

ZXB3-125/W series

- WiFi+485 metered circuit breaker
- WiFi+RS485 metering leakage circuit breaker

2022.05

1 Application scope and characteristics
ZXB3-125W series WIFI+RS485 intelligent circuit breaker is suitable for AC 50/60Hz, rated working voltage230/400V, rated working current 80A and below the user or load, when there is over and under voltage in the line (set over and under voltage) to protect the electrical equipment; At the same time with overload and short circuit protection function, beautiful appearance, excellent and reliable performance, high breaking capacity, rapid release, remotecontrol can be achieved, product modular rail installation.
2 Normal operating conditions
2.1 Ambient air temperature
a. The upper limit value shall not exceed +40℃.
b. The lower limit is not lower than -5℃.
c. The average value within 24 hours does not exceed +35℃.
d. Limit operating temperature -25℃ ~ +70℃.
2.2 Altitude
The elevation of the installation site does not exceed 2000 meters
2.3 Atmospheric Conditions
a.When the ambient air temperature is +40 ° C, the relative humidity of the air does not exceed 50%, and the relative humidity can be higher at lower temperatures.
b. When the average monthly minimum temperature of the wettest month is 25℃, the average monthly phase humidity is 90%.
c. Condensation on the surface of the product due to temperature changes has been taken into account.
2.4 Pollution Level
The protectors are used at level 2 pollution level.

2.5 Installation Categories
The installation category is Ⅱ and Ⅲ.
3 Model and meaning:

ZXB 3L- 125 /W □ □ □
- Rated current A(32/40/50/63/80/100/125)
- Instantaneous release type :B/C/D type
- Number of poles: 1P,2P,3P,4P
- WIFI communication type
- Rating current :125A
- With leakage protection
- Design sequence number
- Circuit breaker enterprise model

4 Technical parameters:
4.1 Rated operating voltage: AC230V/400V.
4.2 Frame grade current: 125A.
4.3 Breaking Capability :Ics 6000A.
4.4 Rated current In: In is 10A, 16A, 20A, 32A, 40A, 50A, 63A, 80A, 100A, 125A.
4.5 Life: mechanical life 10000 times, electrical life 6000 times.
4.6 Operating characteristics under overpressure:
4.6.1 Setting range of overvoltage action value: AC 250−300V
4.6.2 Overvoltage Recovery Uvor: AC 220−250V.
4.7 Undervoltage operation characteristics:
4.7.1 Setting range of undervoltage action value: AC 150−200V.
4.7.2 Undervoltage Recovery Value Uvur: AC 170−220V.
4.7.3 Under voltage operation delay: 0.5S−6S.

4.8 Power on again after power off: Set to automatic mode, when no fault is detected, the automatic closing time is less than 3S; If the mode is set to manual, the switch cannot be automatically closed.
4.9 Wiring: Clamp wiring terminals.
Wire cross−sectional area up to 35mm
4.10 Installation: Install on a 35.5x7.5mm standard guide rail.
4.11 Protective action characteristics of the protector:The operating characteristics of the overcurrent trip device are shown in Table 1 when the ambient air temperature of the protector is 30~35℃ (that is, when there is no temperature compensation)
4.13RS485 communication Baud rate :9600: communication address range :1−247.
5 Product Features:
5.1 High segmentation capability.
5.2WIFI+RS485 communication, remote switching/closing, setting parameters.
5.3 Maintenance can be remotely locked, remotely unlocked, with mechanical lock;
The mechanical locking device is shown on the right.

Mechanical locking device

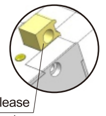

5.4 Undervoltage protection: The undervoltage action value can be set, and the undervoltage function can be turned off. Pull out lock
5.5 Loss of voltage protection: When the undervoltage function is opened, the loss of voltage protection is power−off trip, and the product cannot be manually closed at this time.

5.6 The operating values of voltage, current, leakage current and temperature can be set.
5.7 Can read real−time voltage, current, leakage current, temperature, power value, with metering function.
5.8 Manual/Automatic setting: Manual or automatic mode can be set.
5.9 Can withstand overpressure value: can operate reliably under overpressure (N−L:440V), and the product is not damaged.

No.	Type of transient overcurrent trip device	Circuit breaker rated current In	Initial state	Test current	Fixed time	Expected result
1	B、C、D	In≤63A	Cold state	1.13In	≥1h	non-trip
		In>63A			≥2h	
2	B、C、D	In≤63A	Hot state	1.45In	≤1h	trip
		In>63A			≤2h	
3	B、C、D	In≤32A	Cold state	2.55In	1s<t<60s	trip
		In>32A			1s<t<120s	
4	B	All values	Cold state	3In	≤0.1s	non-trip
	C			5In		
	D			10In		
5	B	All values	Cold state	5In	<0.1s	trip
	C			10In		
	D			20In		

Table 1

6 Installation
6.1 Overall dimensions (10−63A) are shown in Figure 2,(80−125A) in Figure 3;Installation dimensions are shown in Figure 4.
6.2 Installation MethodsThe circuit breaker shall be installed vertically on the mounting rail using M5 screwsFirst fixed on the rubber board or metal plate.

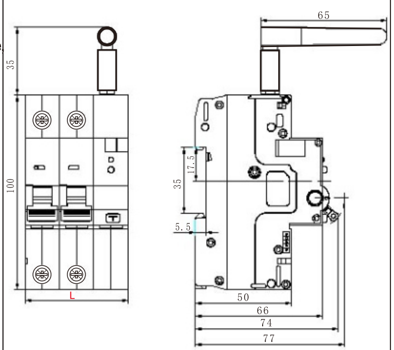

10A/16A/20A/32A/40A/50A/63A

Number of poles	1P	2P	3P	4P
breadth L (mm)	36	54	72	90

Fig. 1

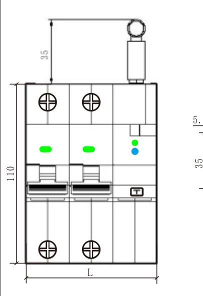

Number of poles	1P	2P	3P	4P
breadth L (mm)	54	81	108	135

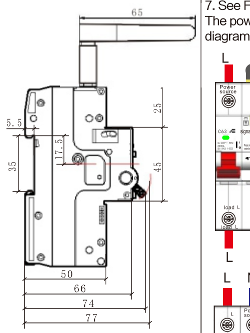

80A/100A/125A

Fig.3

Fig.4

7. See Figure 5 for the wiring diagram:
The power end and the load end shall be connected according to the diagram.

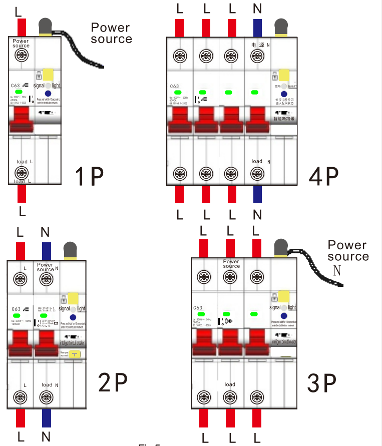

Fig.5

8. Indicator description: See Figure 6
- The green light is normal: If the green light is steady on, the switch is off .
- If the green light is blinking, the switch is off . Long press " "
- If the indicator is steady red, it is locked.
  Blinking red: The switch is faulty and cannot be closed.
  The preceding indicates the status of the RS485 indicator.
- If there is WiFi, the indicator indicates the signal status.
  If the indicator blinks green at short intervals, the network is connected successfully, and if the indicator blinks green at long intervals, the network is off line.-

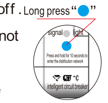

9 Communication Instructions:
9.1 Communication Settings and function instructions refer to the communication protocol.
9.2 Over and Under Voltage Enable or disable using function commands.
9.3 Remotely lock the circuit breaker by locking function commands. After locking, the circuit breaker cannot be manually closed, which is convenient for maintenance; Need to send the unlock command before manual closing.
9.4 Setting automatic closing or manual state by function command.
9.5 Real-time voltage and circuit breaker opening/closing state can be read through functional instructions.
Figure 6
Note: To send instructions, the product must be powered on and maintain communication.

Fig.7

10 Install the Tuya Smart APP.
10.1 Directly scan the QR code in Figure 7 for installation.
10.2 Search for "Tuya Smart" on your Android smart phone and install it.
10.3 For an iPhone, search for the "smart life" app in app store and install it.

10.4 Connect the circuit breaker correctly with the wire and power on according to the requirements as shown in Figure 5, and wait for the circuit breaker signal indicator to light up.
11 Distribution Network:
11.1 Run Graffiti Intelligence, tap + in the upper right corner, and the Add Manually dialog box is displayed.

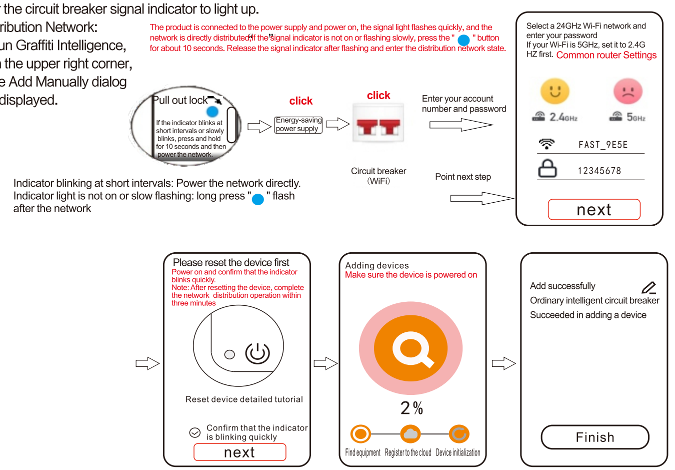

11.2 Devices are added successfully and then automatically connected to the network. The connection may take several minutes.
When the indicator (green) is steady on, the connection is successful
11.3 When the indicator is steady on and the connection is successful, you can operate the switch/switch on the mobile APP.
11.4 When the network is connected, the circuit breaker can be operated to open/close, and can be set to share, timing, delay, user operation notification, power on state, etc.

12 Precautions:
12.1 The circuit breaker shall not be affected by rain during transportation and storage, and the product shall be stored in a place with air circulation.
12.2 Dust and dirt should be removed regularly during use. It is best to use a mask to expose only the handle part of the circuit breaker.
12.3 Before use, check whether the basic technical data on the nameplate or logo meets the requirements.
12.4 The protection characteristics of the circuit breaker are set by the manufacturer and cannot be disassembled and adjusted at will during use.
12.5 Zero Live wire must not be connected incorrectly.
12.6 Before use, tighten the cable screws to avoid bad contact and damage to the product.
12.7 The setting temperature of this series of circuit breakers is 30+5℃. If multiple circuit breakers are installed in the same sealed box, the capacity reduction factor is 0.8.

13 If the signal indicator is off, check it
13.1 Power Cables are connected as required (The neutral cable delivered with the 1P/3P product must be connected to the neutral cable of the power distribution system)
13.2 Check whether the power supply voltage is normal.

WiFi+RS485 intelligent circuit breaker

model		Mechanical locking	Overload protection	Set the overvoltage and undervoltage protection parameters	Leakage protection parameter setting, off	Current detection parameter setting, off	Manual/automatic Settings	Remote lock/unlock	Parameter reading/modifying	Power (with metering)	Communication mode
STB3-125/W	1P	●	●	●	○	○	●	●	●	○	MODBUS
	2P	●	●	●	○	○	●	●	●	○	
	3P	●	●	●	○	○	●	●	●	○	
	4P	●	●	●	○	○	●	●	●	○	
STB3-125/WJ	1P	●	●	●	○	●	●	●	●	●	
	2P	●	●	●	○	●	●	●	●	●	
	3P	●	●	●	○	●	●	●	●	●	
	4P	●	●	●	○	●	●	●	●	●	
STBL3-125/W	2P	●	●	●	●	○	●	●	●	○	
	4P	●	●	●	●	○	●	●	●	○	
STB3L-125/WJ	2P	●	●	●	●	●	●	●	●	●	
	4P	●	●	●	●	●	●	●	●	●	

● With this function
○ No such function

Model and function list

14 use place
It is mainly used for remote control of electrical equipment such as home, villa, school, hospital, shopping mall, office building, irrigation, farm, pump, rental house, etc.

15 Main Functions
15.1 Short Circuit Protection
15.2 Overload Protection
15.3 Voltage Detection
15.4 Leakage detection
15.5 Temperature Detection
15.6 Current Detection
15.7 Reading Power
15.8 Overvoltage and undervoltage can be set and closed
15.9 The rated current can be set
15.10 The leakage action value can be set and the leakage protection can be turned off.
15.11 Protecting Local mechanical locks
15.12 Manual/Closing Circuit breaker
15.13 Remote Lock, Remote Unlock
15.14 You can read and modify parameters

16 Ordering Instructions
Order this product must indicate :a, product name, model, pole number. b, frame level current. c,RS485 metering type indicates RJ; RS485 metering tapeWiFi indicates WRJ. d, with leakage means L. e, instantaneous trip characteristic B/C/D. f, rated current. g, quantity.
Such as: shell frame grade current 125A, RS485+WiFi metering with leakageWJ, 2P, C-type trip type, rated current 63A, 100 sets.
It should be expressed as: ZXB3L-125/WRJ/2P/C63/100

17 See Figure 8 for the product panel description.

1. Click " " button to switch/close switch.
2. Press and hold the " " button for 10 seconds, and the flash will enter the network distribution state.

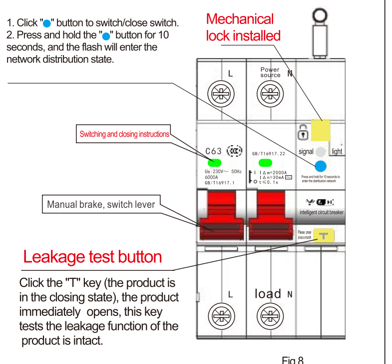

Click the "T" key (the product is in the closing state), the product immediately opens, this key tests the leakage function of the product is intact.

Fig.8

Note:
- The intelligent circuit breaker has a voltage, current, leakagecurrent, temperature operation value can be set.
- Can read real-time voltage, current, leakage current, temperature, power value, with metering function.
- Remote control, remote setting parameters.

Dear users:
Thank you for choosing our products. Please read the following terms carefully before installing and using this product.1 Warranty period From the date of purchase, if the product is damaged or cannot be used normally due to product quality problems caused by manufacturing, it will be given a one-year warranty.2 The following circumstances are no longer covered by warranty:Any damage or failure caused by improper environment or conditions of use. Improper installation, misuse, unauthorized maintenance, disassembly, modification,Damage or failure caused by accidents, force majeure events or other causes.Any damage or failure caused by the use of third party products, software, or components.The product is out of warranty. Product barcode is not recognizable or does not match. If the returned product does not comply with the valid warranty terms, the company will charge a repair fee.

Welcome to use this product, read this book carefully before use.